Model No:LED 1W White 110 Lm

White Power LED

Lead(Pb) Free Product-ROHS Compliant

■ Applications

1. Reading lights
2. Portable flashlight
3. Contour lights
4. Road lights
5. Garden lighting

Notes:

1.It is strongly recommended that the temperature

of lead be not higher than 55℃

2. Don’t press the surface of silica gel

■ Package Dimensions

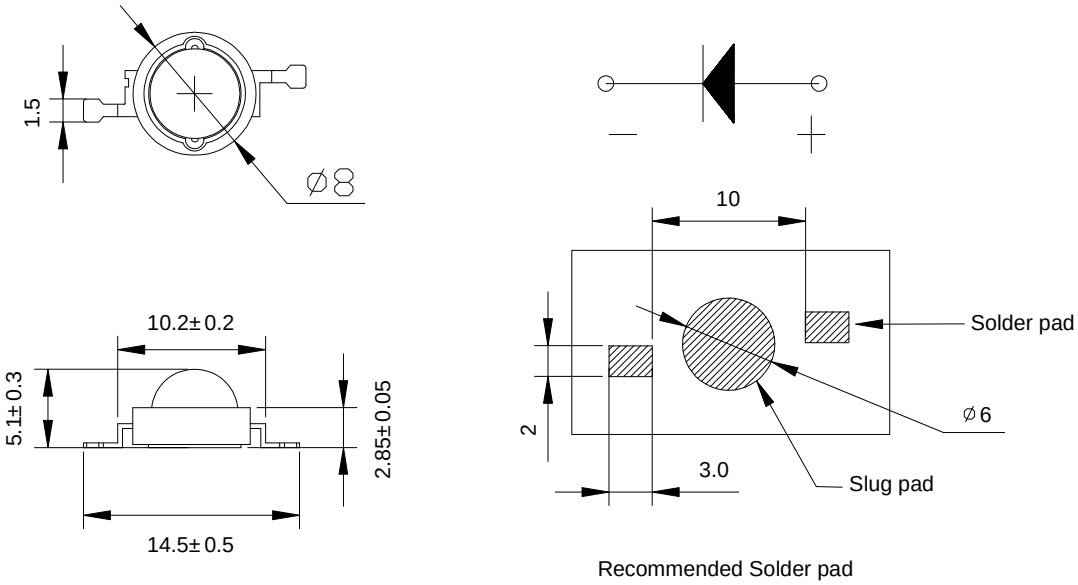

Recommended Solder pad

Notes:

All dimensions in mm tolerance is ±0.1mm unless otherwise noted.

■ Absolute Maximum Ratings (Ta = 25℃)

Items	Symbol	Absolute maximum Rating		Unit
		W		
Power Dissipation	P_D	1100		mW
Forward Current(DC)	I_F	350		mA
Peak Forward Current*	I_{FP}	500		mA
LED Junction Temperature	Tj	125		℃
Operation Temperature	T_{opr}	-30 ~ +110	-30~ +110	℃
Storage Temperature	T_{stg}	-40 ~ +120	-40 ~ +120	℃

*Pulse width≦0.1msec duty≦1/10

■ Typical Electrical & Optical Characteristics(IF=350mA and Ta = 25℃)

Part No	Dominant Wavelength (nm) or CCT(K)		Forward Voltage (v)		Luminous Flux (lm)		Reverse Current (μA) 5V	50% Power Angle
	Min.	Typ.	Min.	Max.	Min.	Typ.	Max.	Typ.
LZ-01HWE	**5500K**	**6100K**	**3.2**	**3.6**	**100**	**110**	**10**	**140**

■ Notes

1. Tolerance of measurement of luminous flux : ±15%
2. Tolerance of measurement of CCT (Correlated color temperature) :±200k
3. Tolerance of measurement of forward voltage :±0.1v

■ Typical Electrical/ Optical Characteristics Curves (Ta=25°C Unless Otherwise Noted)

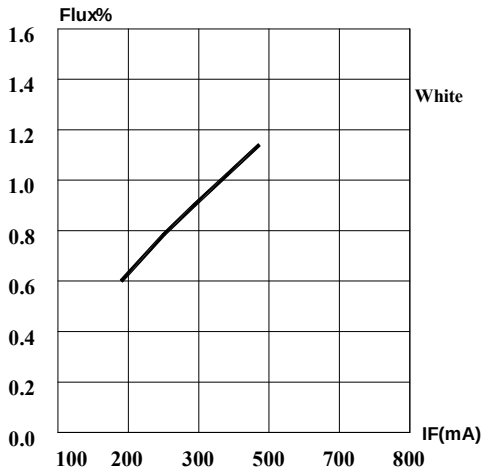

Relative Luminous Flux vs. Forward Current

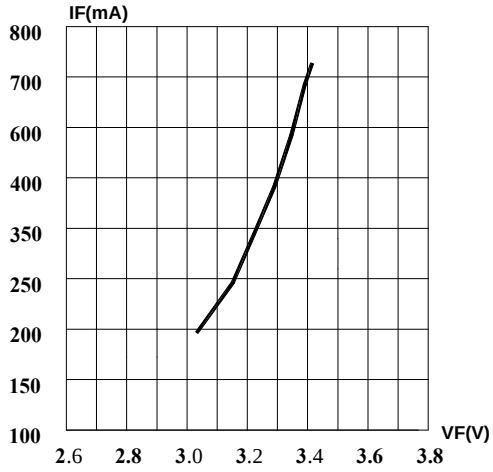

Forward Current vs. Forward Voltage

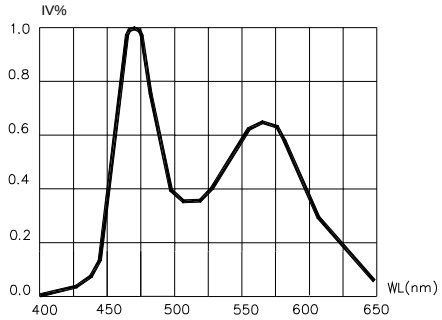

Relative Luminous Intensity vs. Wavelength

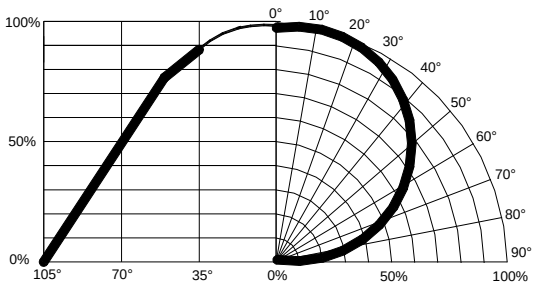

Radiation Angle

Packing Specifications

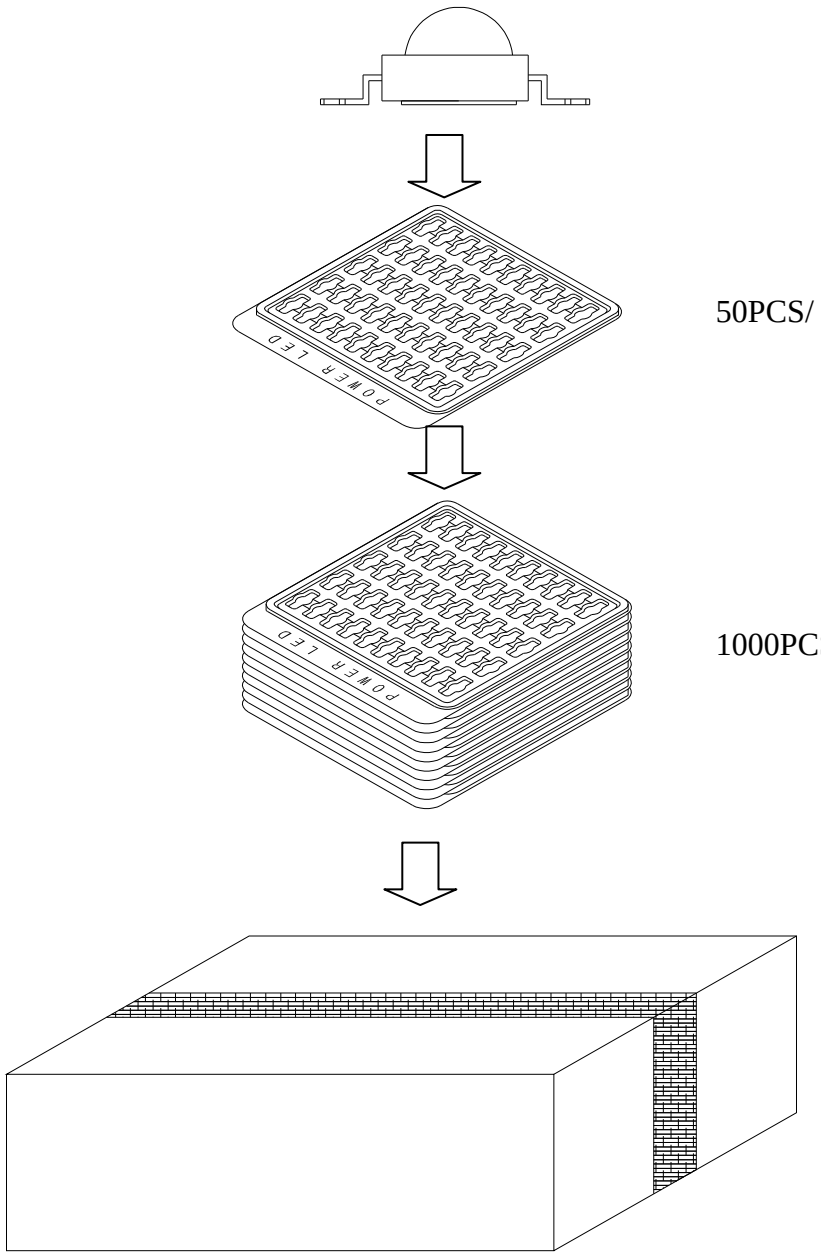

50PCS/ Plastic Box

1000PCS/ 20PCS Plastic Box

2000PCS/Box