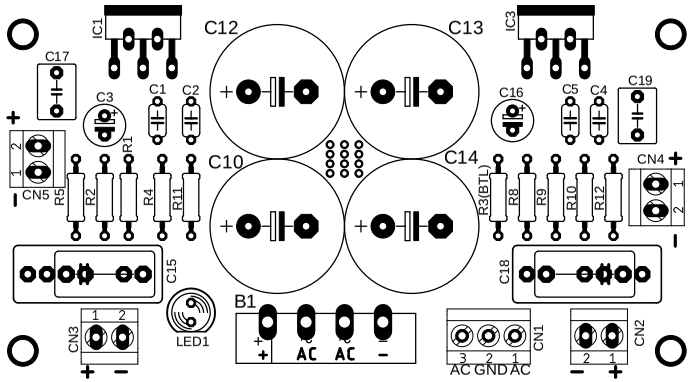
IC1
C12
C13
IC3
C17
C3
C1
C2
C16
C5
C4
C19
R1
CN5
R5
R2
R4
R11
C10
C14
R3(BTL)
R8
R9
R10
R12
CN4
C15
C18
B1
LED1
CN3
CN1
CN2
AC GND AC